Behind-the-Screen Cinema System

KPT-435 B/M

As the first full three-way passive behind-the-screen system on the market, the KPT-435 B/M affords the ultimate in audio performance for small- and medium-sized venues. Less than 20-inches in depth, it is also one of the smallest speakers in its performance category.

Based on the proven KPT-904-LF dual 15-inch bass unit, the KPT-435 B/M delivers powerful bass from a shallow cabinet that is just 17.75 inches deep. In order to reproduce critical dialogue range, this system also features the new KPT-335 HF/MF-N, which consists of a K-510 Tractrix® Horn, two-inch throated compression driver and the K-703 Tractrix horn with a 1.75-inch titanium diaphragm.

Perfect for exhibitors who want to utilize a fully passive or bi-amplified system, the KPT-435 B/M can be utilized as a bi-amp configured three-way system or, by simply changing the crossover network wiring, as a fully-passive three-way mono-amp configuration.

SPECIFICATIONS

FREQUENCY RESPONSE*	45Hz-20kHz ± 3dB, -10dB @ 32Hz
POWER HANDLING	900 watts
CROSSOVER POINTS	800Hz, 5kHz
DELAY	LF- 0ms MF- .1ms HF- .125ms
CROSSOVER SLOPE	24dB/Octave
SENSITIVITY	104dB
COVERAGE	HORIZONTAL 90° ± 20° 250Hz-16kHz VERTICAL 60° ± 20° 2kHz-19kHz
SYSTEM COMPONENTS	LF - KPT-904-LF – 400 watts/ woofer HF/MF - KPT-335-HF/MF-N –100 watts (50HF/50MF)
HEIGHT	62.75" (159.4cm)
WIDTH	27.25" (69.2cm)
DEPTH	17.75" (45.1cm)
WEIGHT	167 lbs. (76kg)

*Frequency response behind a screen with horn equalization applied

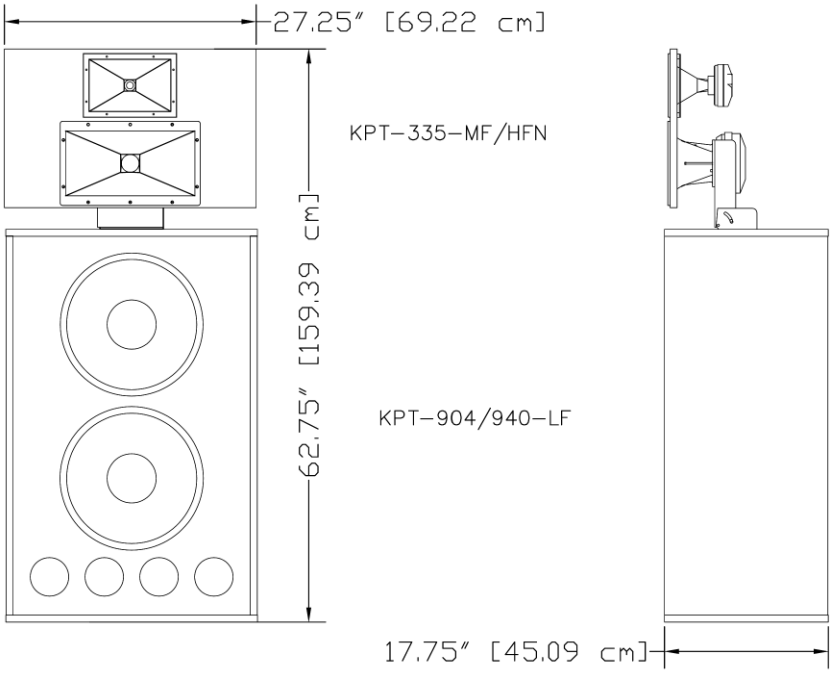

www.klipsch.com
1-800-KLIPSCH

All specifications are subject to change without notice. ©2005